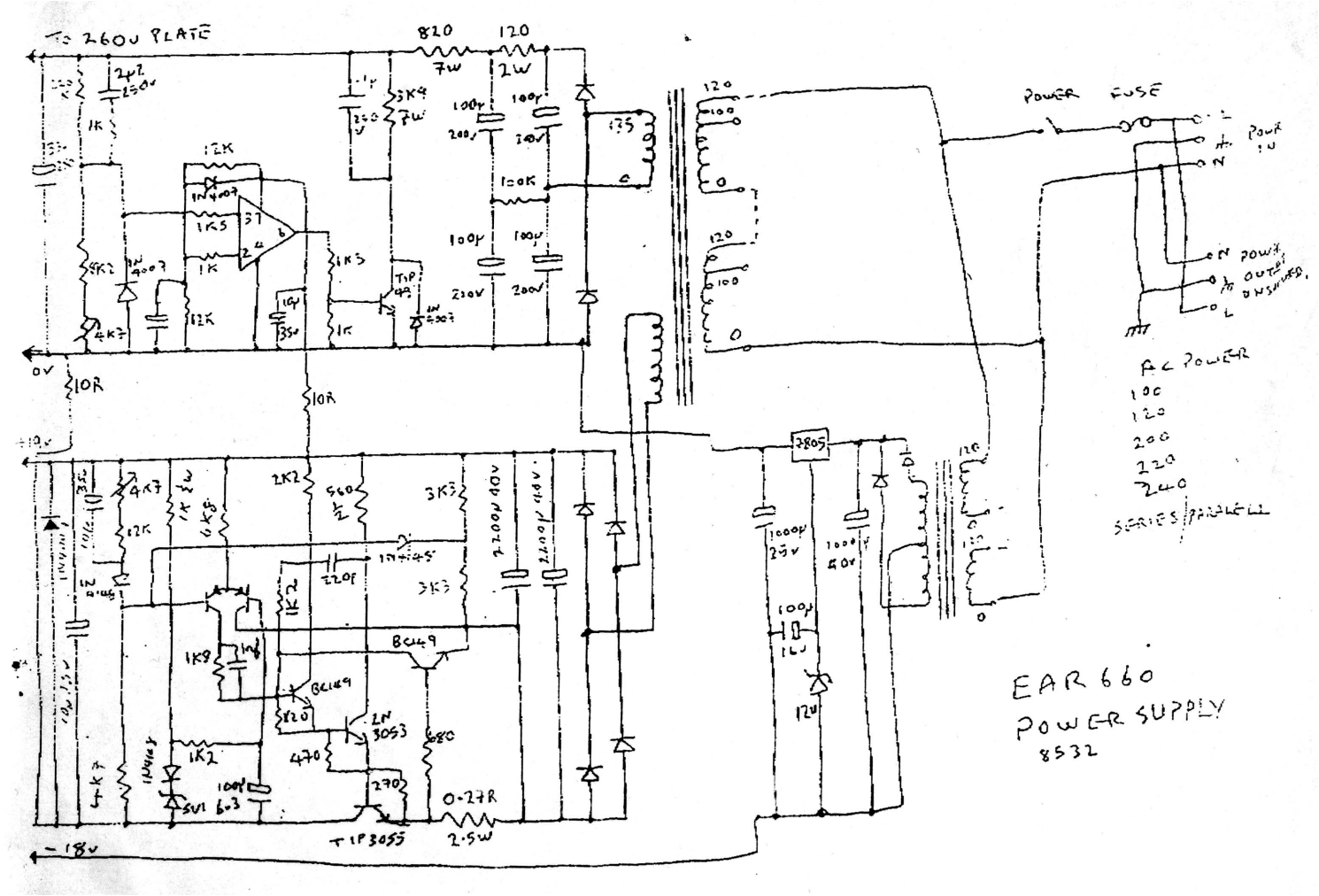

EAR 660
POWER SUPPLY
8532

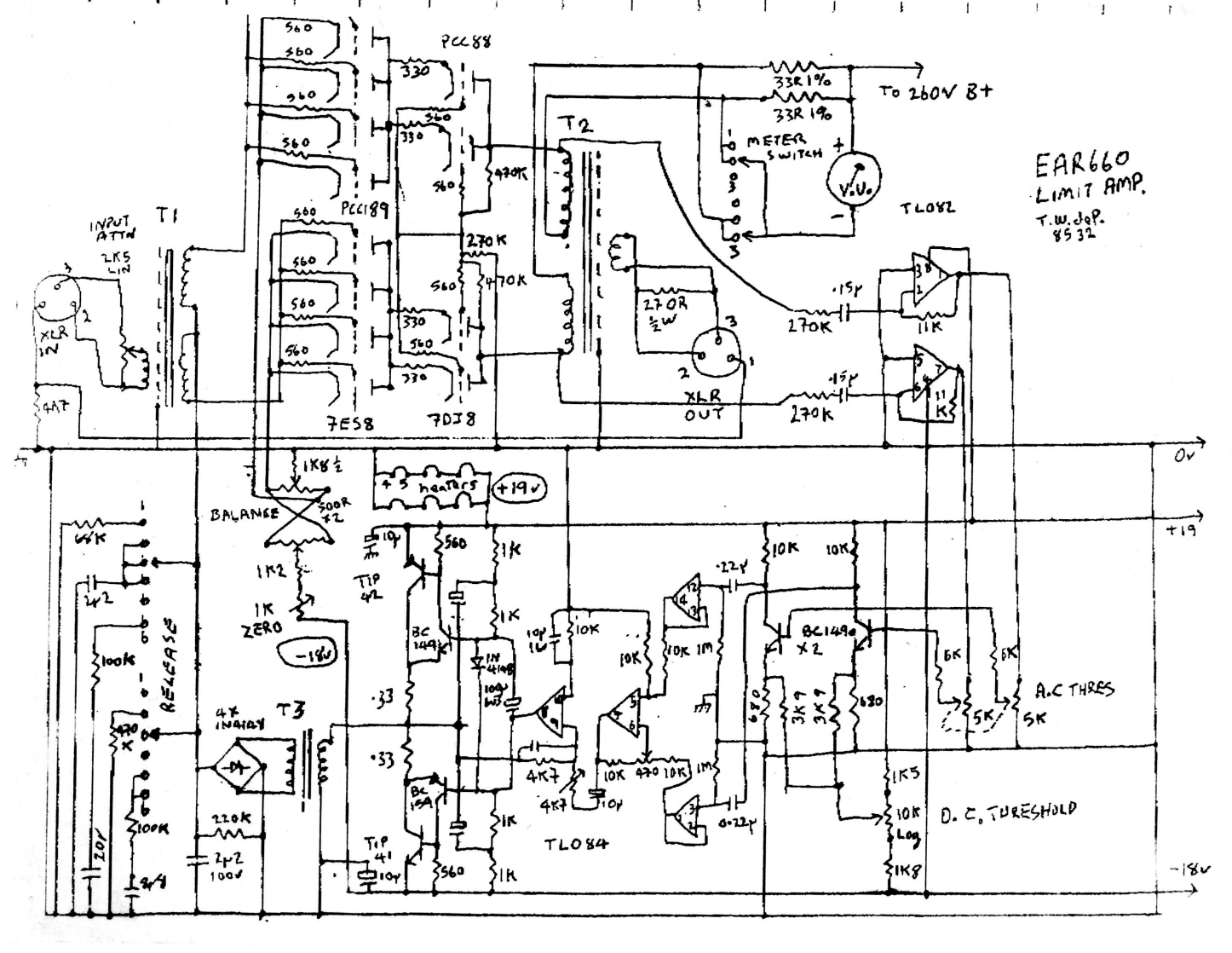
EAR660
LIMIT AMP.
T.W. JoP.
8532
PCC88
PCC189
7ES8
7DJ8
T1
T2
T3
INPUT ATTN
2K5 LIN
XLR IN
XLR OUT
METER SWITCH
V.U.
TL082
TL084
To 260V B+
33R 1%
33R 1%
270R ½W
270K
11K
.15μ
0v
+19
-18v
+5 heaters
+19v
BALANCE
500R X2
1K8 ½
1K2
1K ZERO
-18v
TIP 42
TIP 41
BC 149
BC 159
IN 4148
4X IN4148
RELEASE
100K
470K
220K
2μ2 100v
20μ
4K7
10K
1M
.22μ
0.22μ
680
3K9
6K
5K
A.C THRES
D.C. THRESHOLD
1K5
1K8
Log