| REVISION RECORD | | | |
|---|---|---|---|
| LTR | ECO NO: | APPROVED: | DATE: |
| 1 | Changed R244 and R345 to 3k24 | | 8/2012 |
| 2 | Changed R124 to 249 | | 8/2012 |
| 3 | Tied Q36 thru Q39 TO DGND | | 8/2012 |
| | | | |

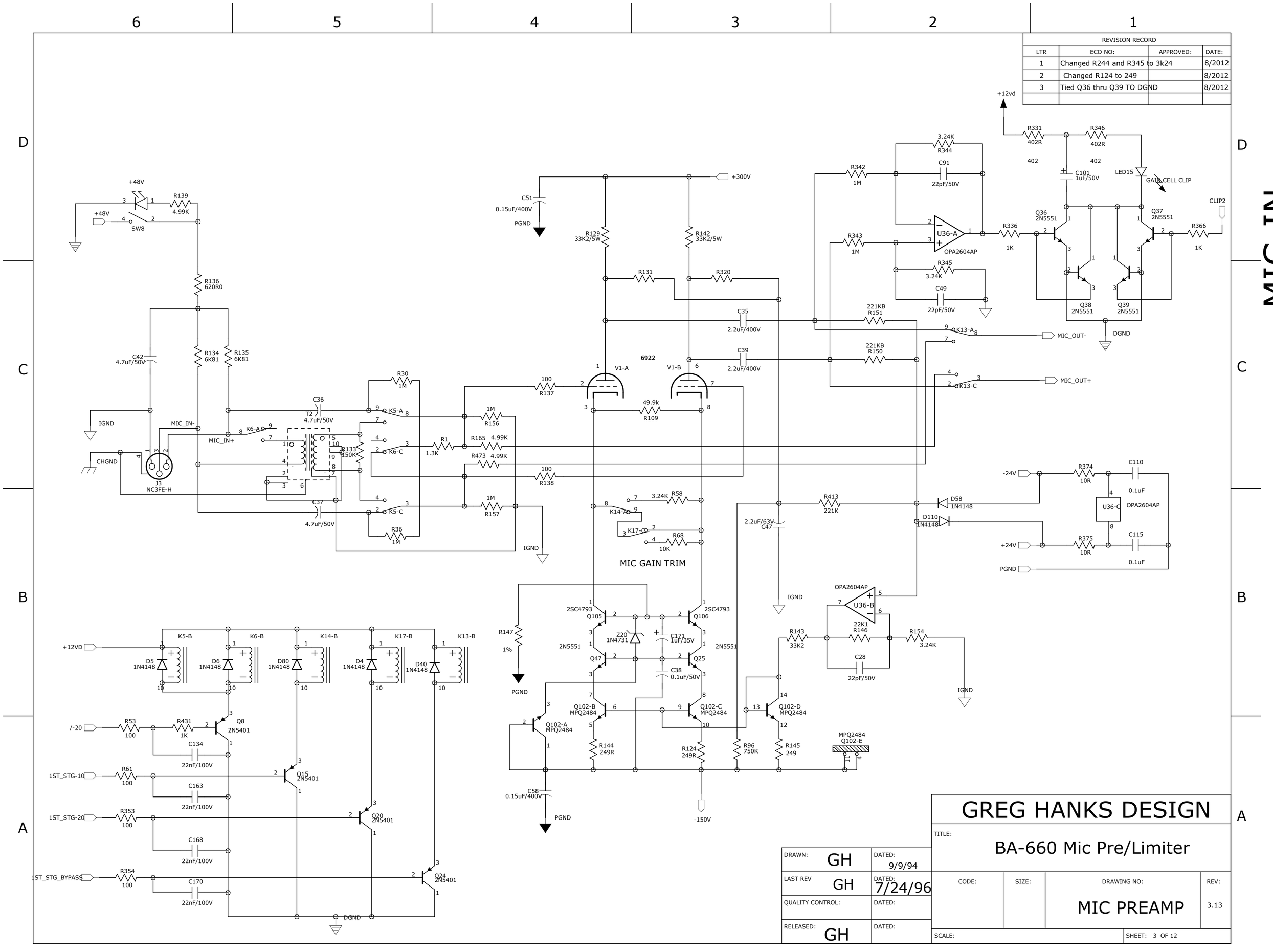


# GREG HANKS DESIGN

TITLE: BA-660 Mic Pre/Limiter

| | | | |
|---|---|---|---|
| DRAWN: GH | DATED: 9/9/94 | | |
| LAST REV GH | DATED: 7/24/96 | | |
| QUALITY CONTROL: | DATED: | | |
| RELEASED: GH | DATED: | | |

| CODE: | SIZE: | DRAWING NO: | REV: |
|---|---|---|---|
| | | MIC PREAMP | 3.13 |

SCALE: SHEET: 3 OF 12