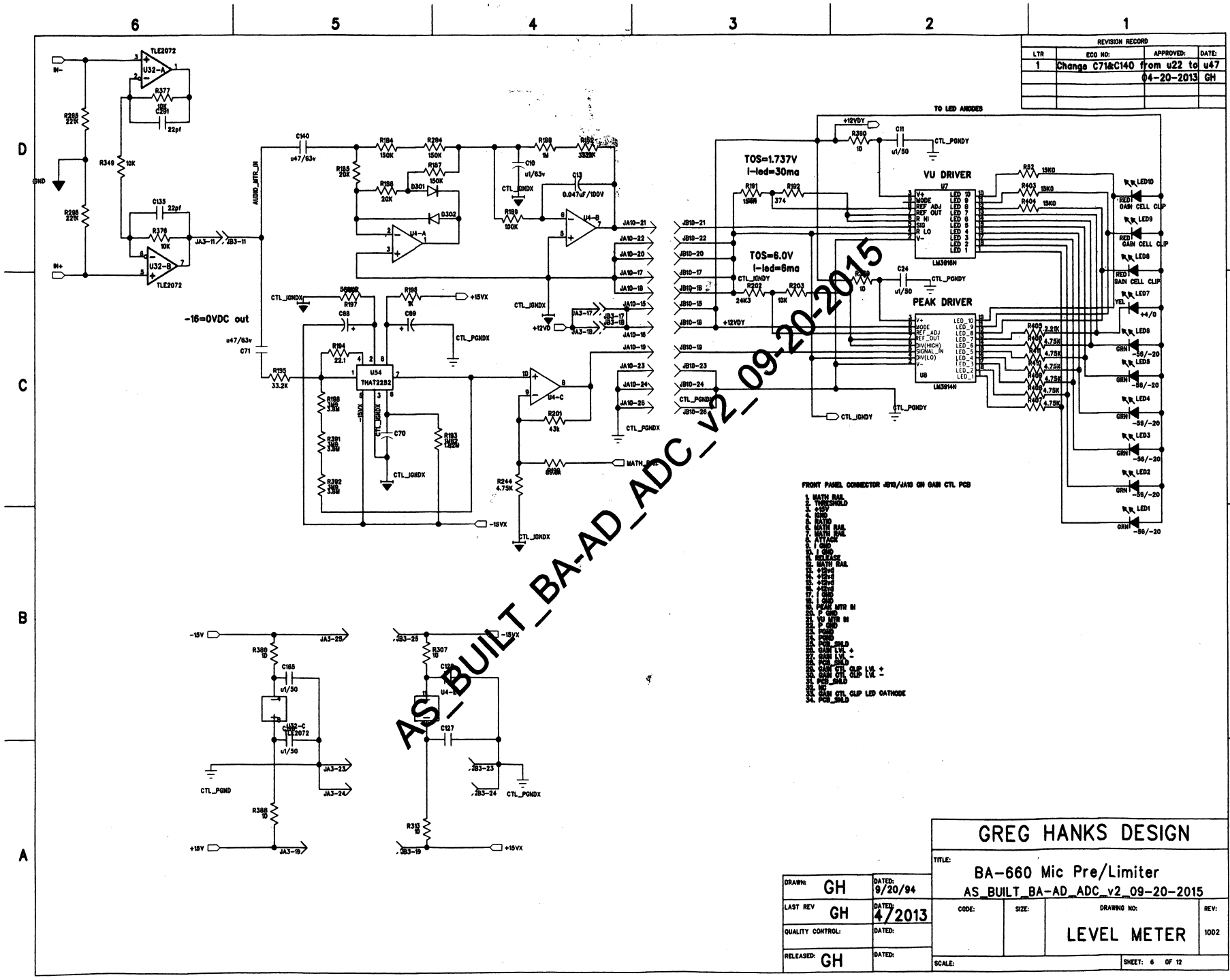
REVISION RECORD
LTR | ECO NO: | APPROVED: | DATE:
1 | Change C71&C140 from u22 to u47 | 04-20-2013 | GH
TO LED ANODES
TOS=1.737V
I-led=30ma
TOS=6.0V
I-led=6ma
VU DRIVER
PEAK DRIVER
-16=0VDC out
FRONT PANEL CONNECTOR JB10/JA10 ON GAIN CTL PCB
AS_BUILT_BA-AD_ADC_v2_09-20-2015
GREG HANKS DESIGN
TITLE:
BA-660 Mic Pre/Limiter
AS_BUILT_BA-AD_ADC_v2_09-20-2015
DRAWN: GH
DATED: 9/20/94
LAST REV GH
DATED: 4/2013
QUALITY CONTROL:
RELEASED: GH
CODE:
SIZE:
DRAWING NO:
LEVEL METER
REV: 1002
SCALE:
SHEET: 6 OF 12
LVLMTRO