REVISION RECORD			
LTR	ECO NO:	APPROVED:	DATE:
1	R6 from 15k to 33k2	GH	5/2012
2	R453 from 15k to 39k	GH	5/2012
3	Add C2 u1/35v Tant	GH	5/2012
4	Removed TR2	gh	7/2012
5	Added TR3 and R45	GH	7/2012

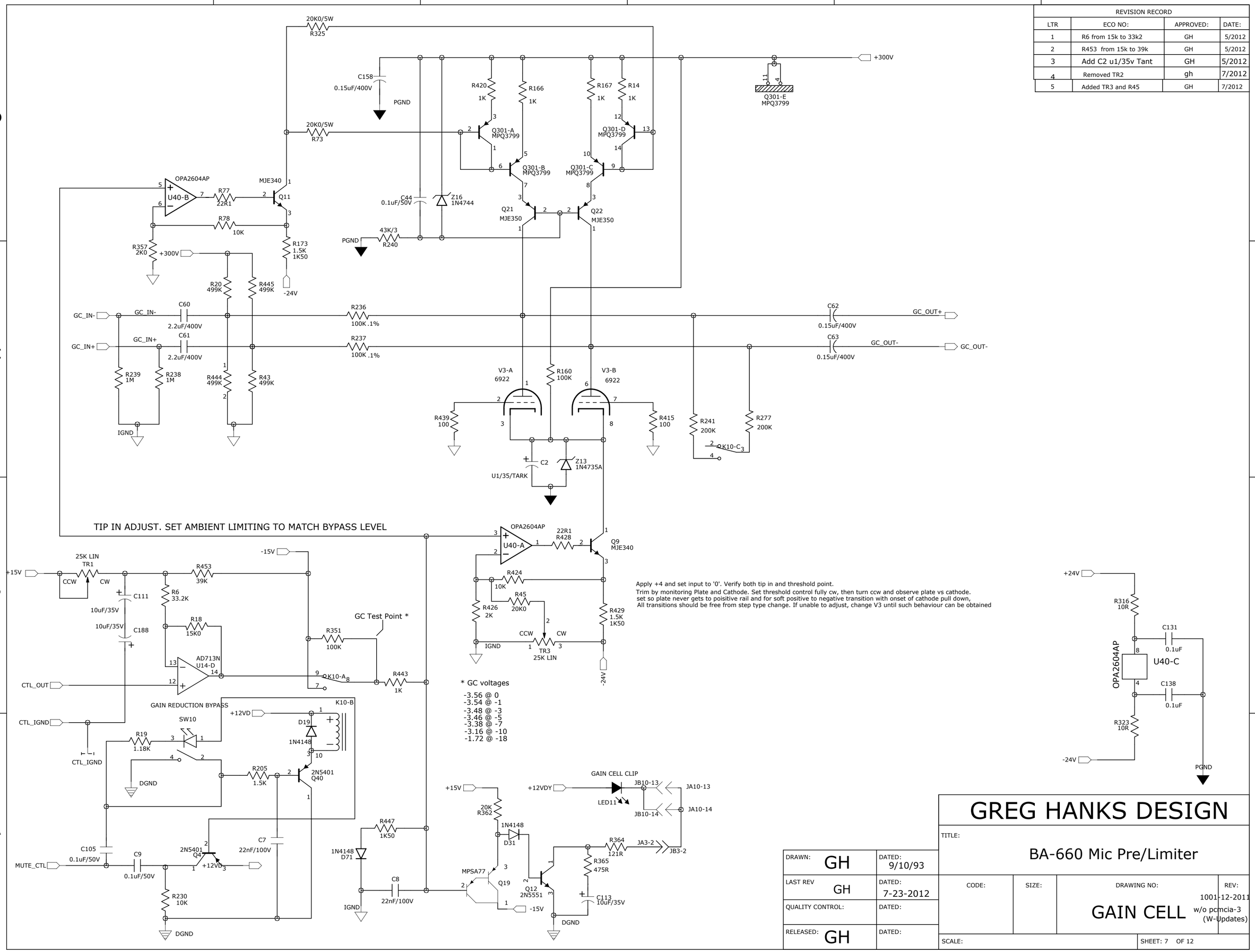

GREG HANKS DESIGN

TITLE: BA-660 Mic Pre/Limiter

DRAWN: GH	DATED: 9/10/93		
LAST REV GH	DATED: 7-23-2012		
QUALITY CONTROL:	DATED:		
RELEASED: GH	DATED:		

CODE:	SIZE:	DRAWING NO:	REV:
		GAIN CELL	1001-12-2011 w/o pcmcia-3 (W-Updates)

SCALE: SHEET: 7 OF 12

G_CELL