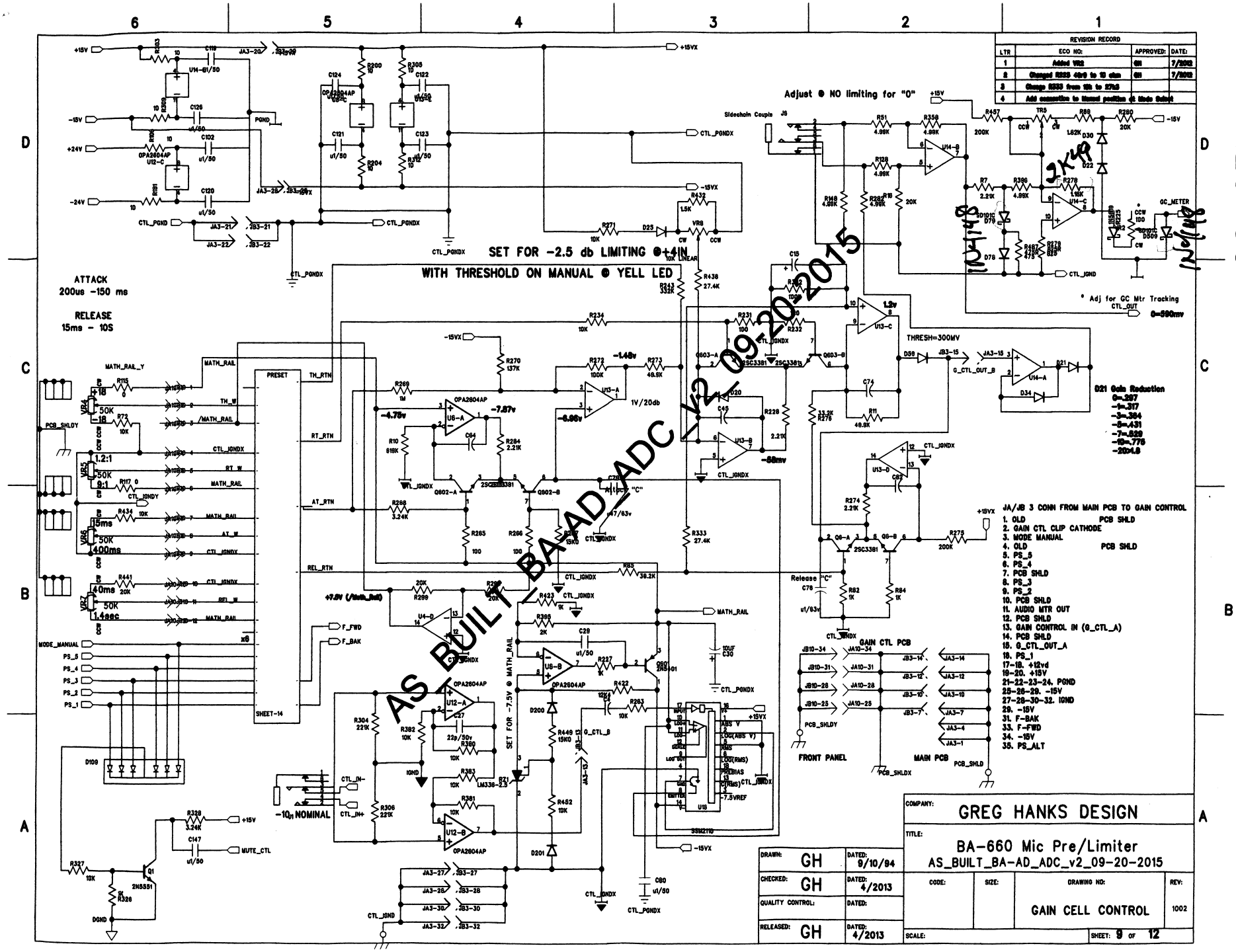

REVISION RECORD
LTR | ECO NO: | APPROVED: | DATE:
1 | Added VR2 | GH | 7/2012
2 | Changed R225 40r9 to 10 ohm | GH | 7/2012
3 | Change R333 from 15k to 27k3
4 | Add connection to Manual position at Mode Select
Adjust @ NO limiting for "0"
SET FOR -2.5 db LIMITING @+4IN
WITH THRESHOLD ON MANUAL @ YELL LED
ATTACK
200us -150 ms
RELEASE
15ms - 10S
Sidechain Couple
GC_METER
* Adj for GC Mtr Tracking
CTL_OUT
0-590mv
THRESH=300MV
D21 Gain Reduction
0=.297
-1=.317
-3=.364
-5=.431
-7=.529
-10=.775
-20=1.8
1V/20db
SET FOR -7.5V @ MATH_RAIL
-10Ω NOMINAL
GAIN CTL PCB
FRONT PANEL
MAIN PCB
JA/JB 3 CONN FROM MAIN PCB TO GAIN CONTROL
1. OLD PCB SHLD
2. GAIN CTL CLIP CATHODE
3. MODE MANUAL
4. OLD PCB SHLD
5. PS_5
6. PS_4
7. PCB SHLD
8. PS_3
9. PS_2
10. PCB SHLD
11. AUDIO MTR OUT
12. PCB SHLD
13. GAIN CONTROL IN (G_CTL_A)
14. PCB SHLD
15. G_CTL_OUT_A
16. PS_1
17-18. +12vd
19-20. +15V
21-22-23-24. PGND
25-26-29. -15V
27-28-30-32. IGND
29. -15V
31. F-BAK
33. F-FWD
34. -15V
35. PS_ALT
AS BUILT BA-AD_ADC_v2_09-20-2015
GC CTL
COMPANY: GREG HANKS DESIGN
TITLE: BA-660 Mic Pre/Limiter
AS_BUILT_BA-AD_ADC_v2_09-20-2015
DRAWN: GH DATED: 9/10/94
CHECKED: GH DATED: 4/2013
QUALITY CONTROL: DATED:
RELEASED: GH DATED: 4/2013
CODE: SIZE: DRAWING NO: GAIN CELL CONTROL REV: 1002
SCALE: SHEET: 9 OF 12