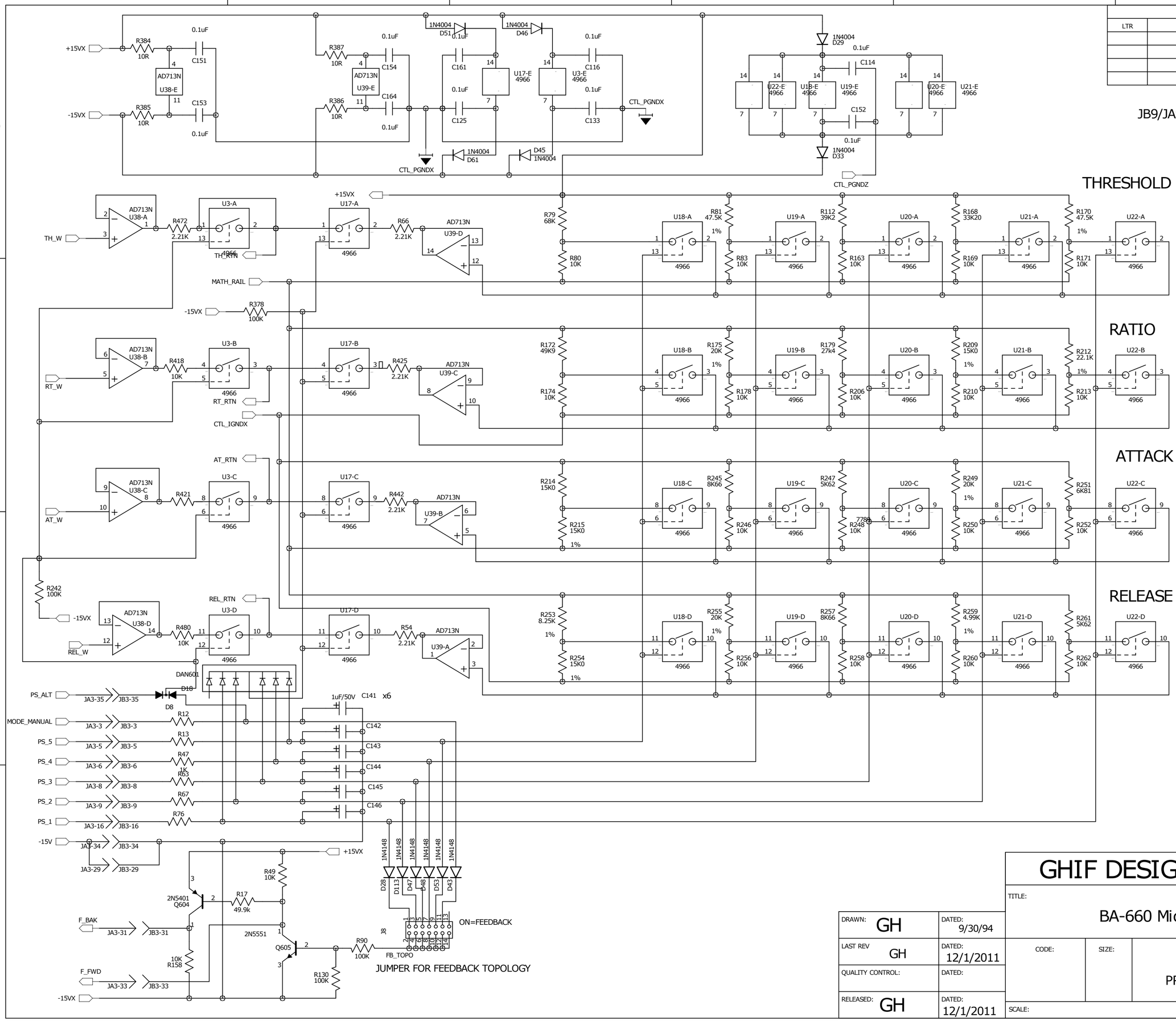

REVISION RECORD			
LTR	ECO NO:	APPROVED:	DATE:

GHIF DESIGN

TITLE: BA-660 Mic Pre/Limiter

DRAWN: GH	DATED: 9/30/94		
LAST REV GH	DATED: 12/1/2011		
QUALITY CONTROL:	DATED:		
RELEASED: GH	DATED: 12/1/2011		

CODE:	SIZE:	DRAWING NO:	REV:
		PRESET FLAVORS	3.13
SCALE:		SHEET: 10 OF 12	