REVISION RECORD			
LTR	ECO NO:	APPROVED:	DATE:

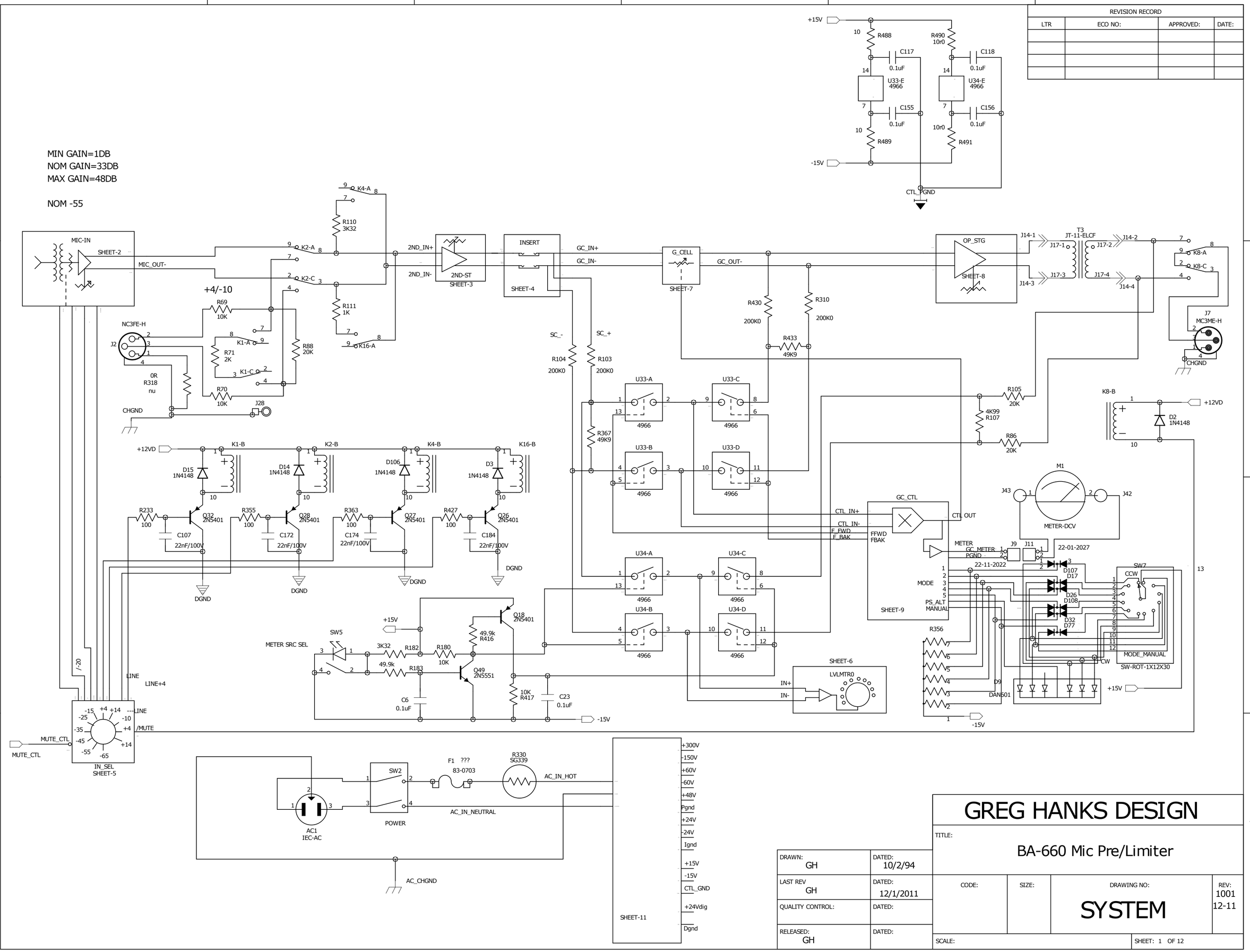

GREG HANKS DESIGN

TITLE: BA-660 Mic Pre/Limiter

DRAWN: GH	DATED: 10/2/94		
LAST REV GH	DATED: 12/1/2011		
QUALITY CONTROL:	DATED:		
RELEASED: GH	DATED:		

CODE:	SIZE:	DRAWING NO:	REV:
		SYSTEM	1001 12-11

SCALE: SHEET: 1 OF 12

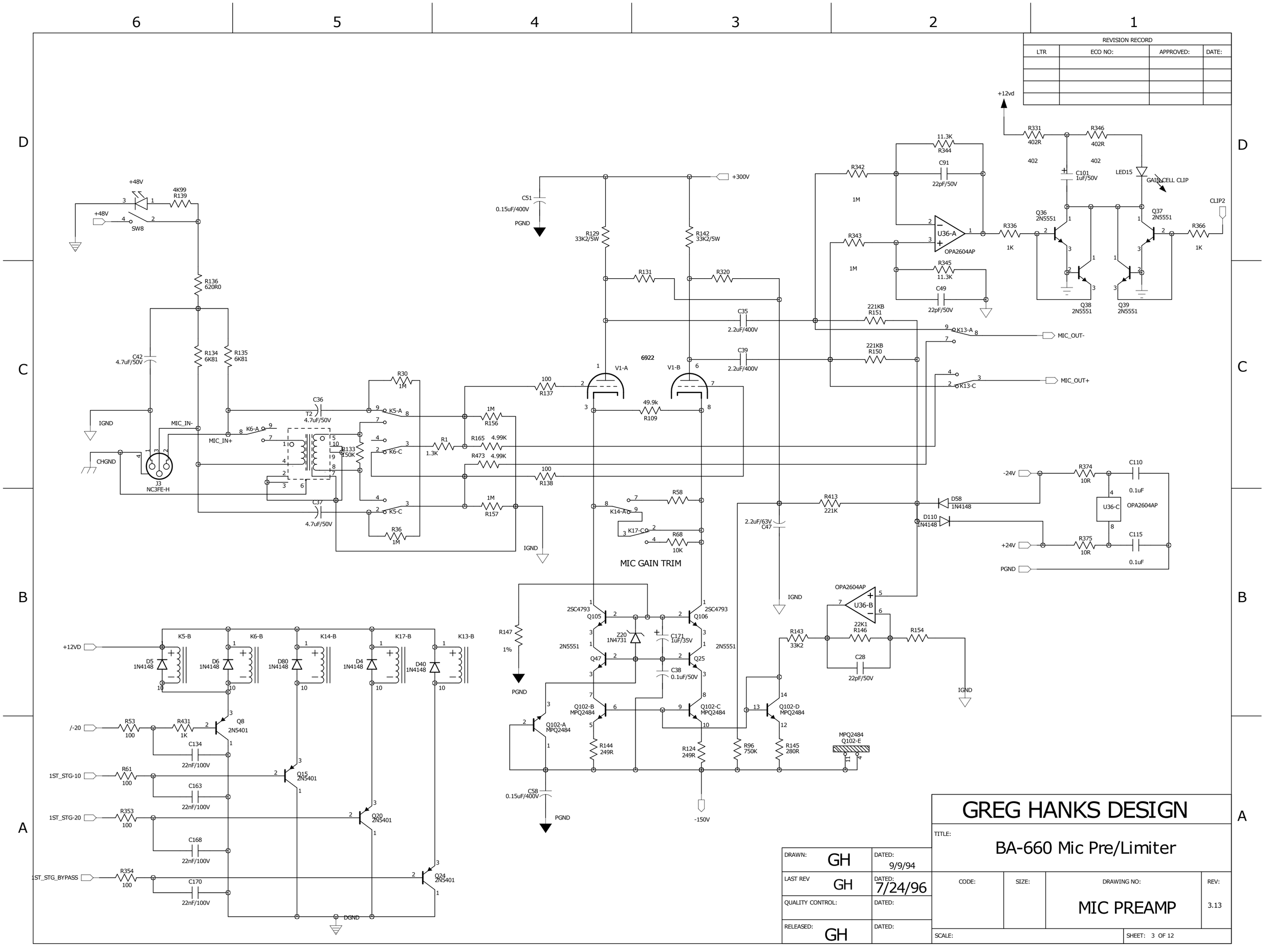

REVISION RECORD			
LTR	ECO NO:	APPROVED:	DATE:

GREG HANKS DESIGN

TITLE: BA-660 Mic Pre/Limiter

DRAWN: GH	DATED: 9/9/94		
LAST REV GH	DATED: 7/24/96		
QUALITY CONTROL:	DATED:		
RELEASED: GH	DATED:		

CODE:	SIZE:	DRAWING NO:	REV:
		MIC PREAMP	3.13
SCALE:		SHEET: 3 OF 12	

REVISION RECORD			
LTR	ECO NO:	APPROVED:	DATE:

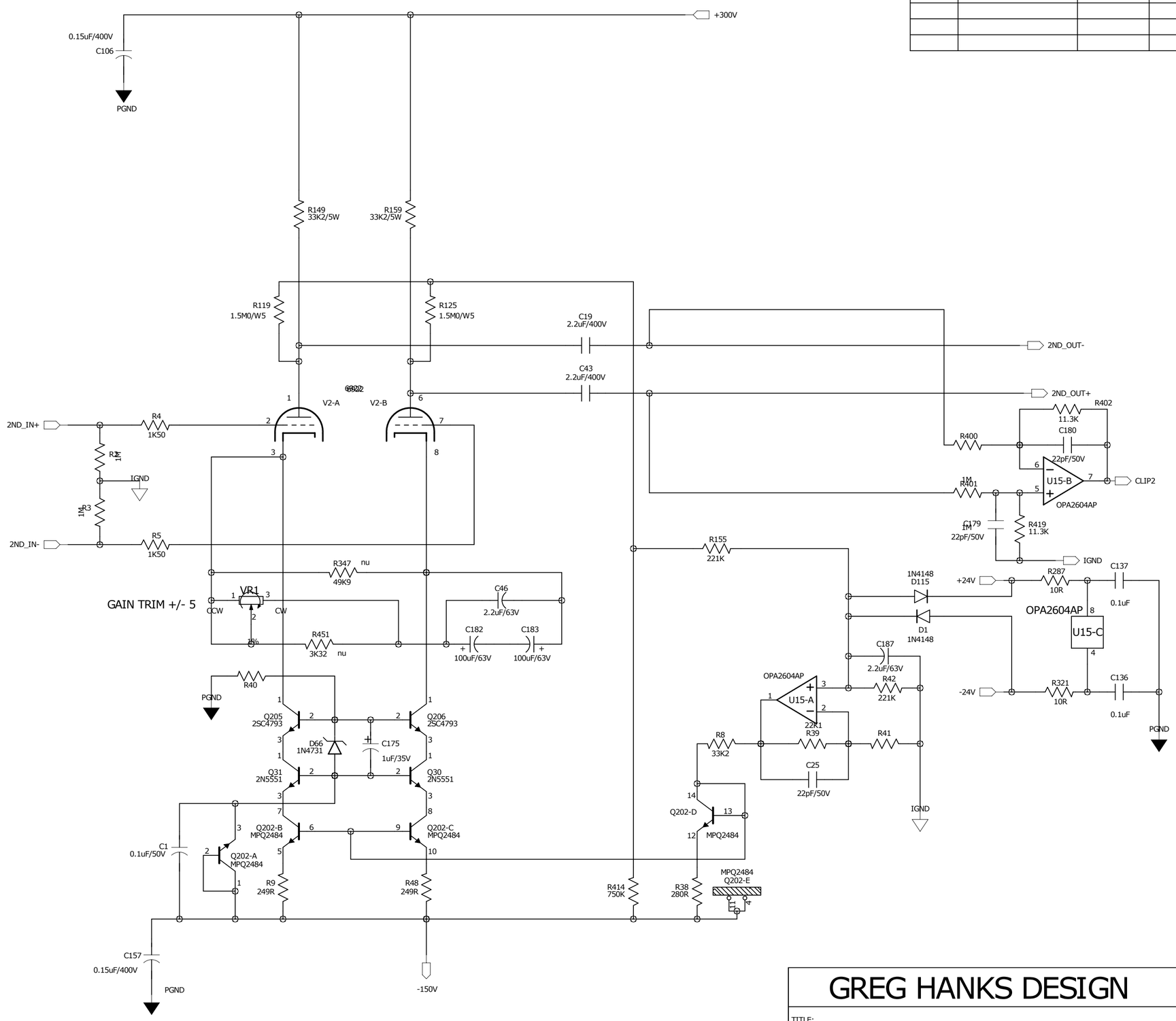

GREG HANKS DESIGN

TITLE: BA-660 Mic Pre/Limiter

DRAWN: GH	DATED: 9/9/94		
LAST REV GH	DATED: 12-2011	CODE:	SIZE:
QUALITY CONTROL:	DATED:	DRAWING NO: 2ND STAGE	REV: 4
RELEASED: GH	DATED:	SCALE:	SHEET: 4 OF 12

REVISION RECORD			
LTR	ECO NO:	APPROVED:	DATE:

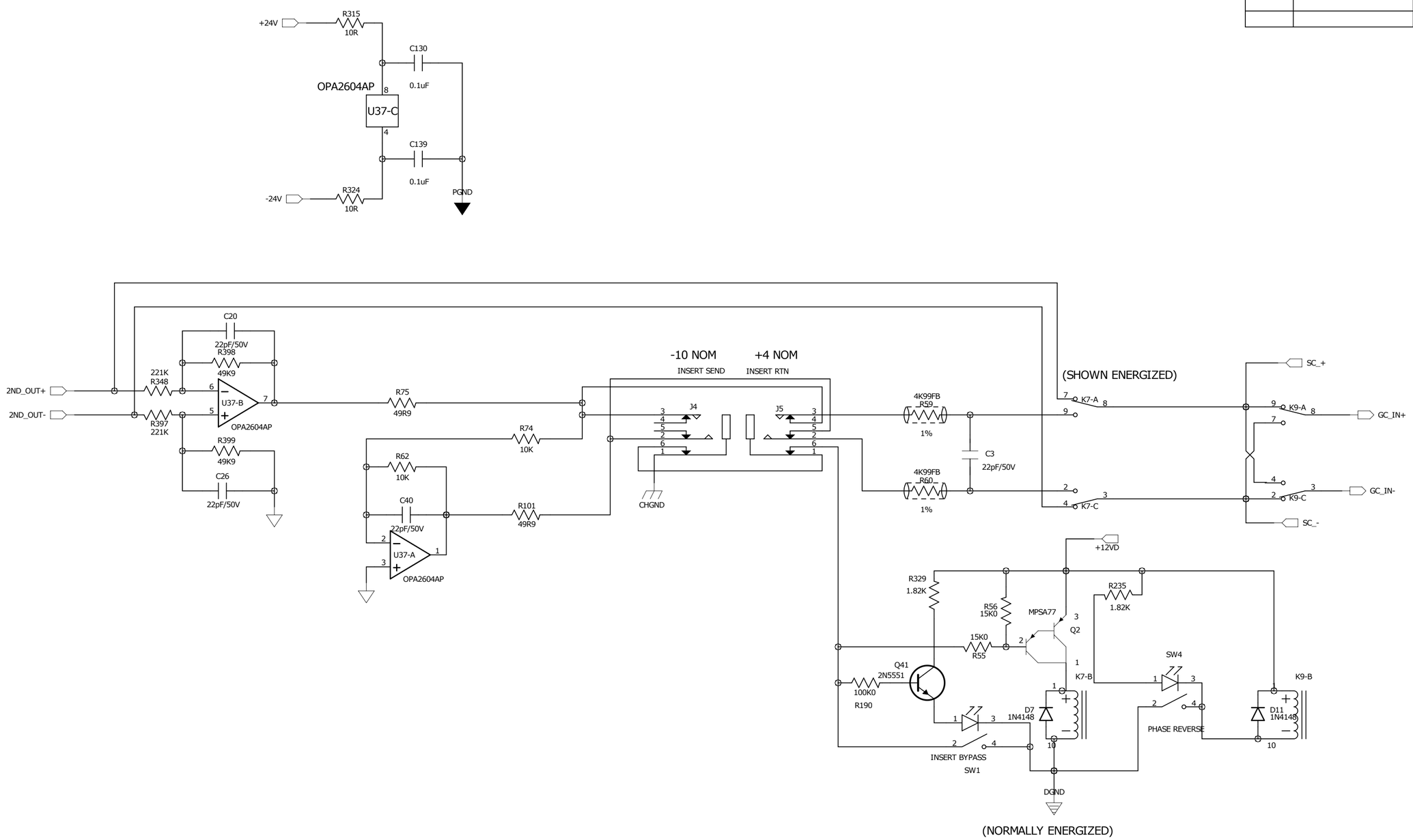

COMPANY:	GREG HANKS DESIGN		
TITLE:	BA-660 Mic Pre/Limiter		
DRAWN: GH	DATED: 5/5/95	CODE:	SIZE:
CHECKED:	DATED:	DRAWING NO: INSERT SEND AND RTN	REV: 3.13
QUALITY CONTROL:	DATED:		
RELEASED: GH	DATED: 4/1/96	SCALE:	SHEET: 5 OF 12

REVISION RECORD			
LTR	ECO NO:	APPROVED:	DATE:

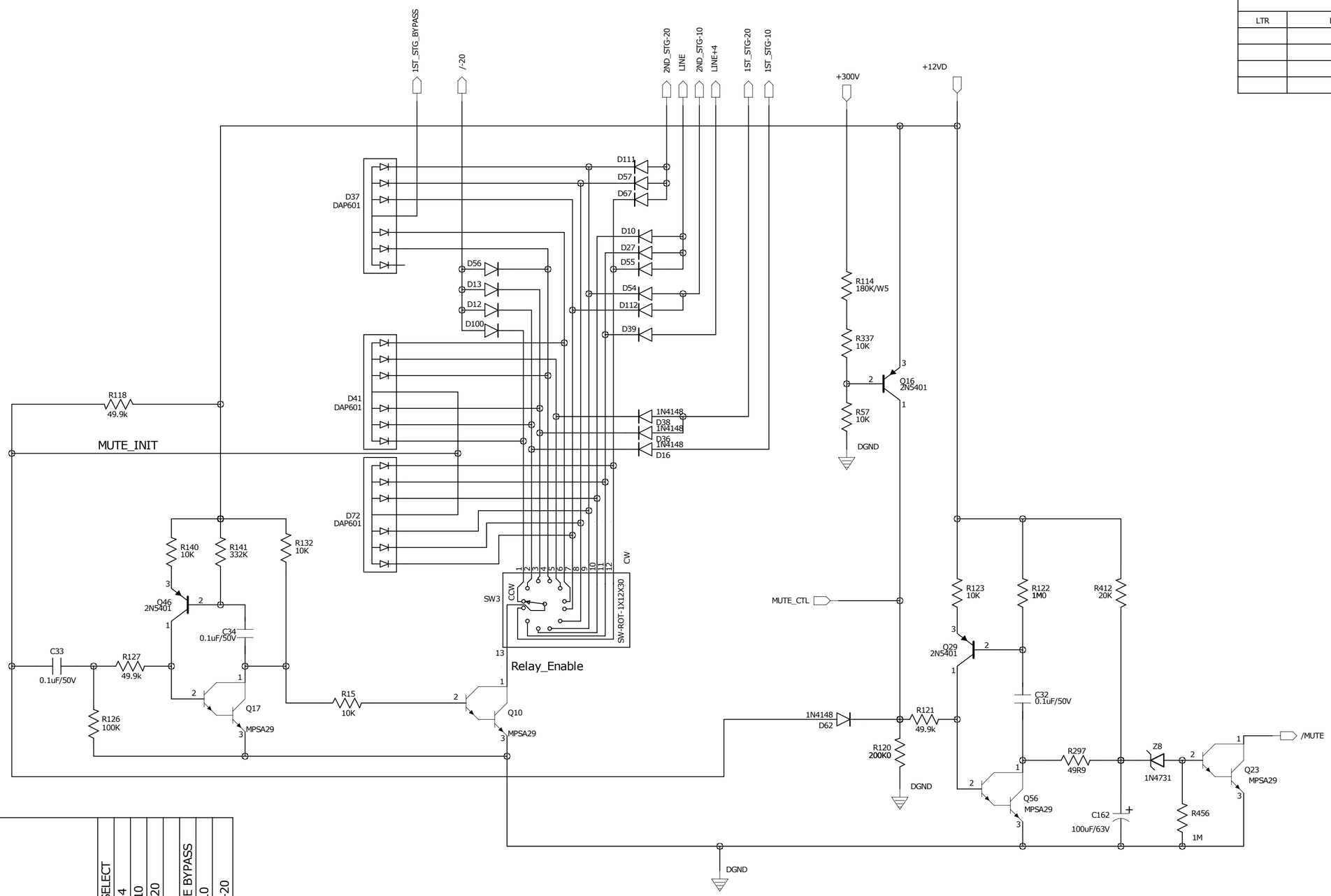

Relay Switch Logic	K2- MIC/LINE SELECT	K1- LINE -10/+4	K14- 1ST STG-10	K17- 1ST_STG-20	K5,K6- /-20	K13- 1ST STAGE BYPASS	K4- 2ND_STG-10	K16- 2ND_STG-20
X=ON								
12- LINE +14	X							X
11- LINE +4	X	X						
10- LINE -5	X							
9- MIC +14						X	X	X
8- MIC +4						X		X
7- MIC -5						X	X	
6- MIC -15						X		
5- MIC -25				X				
4- MIC -35					X	X		
3- Mic -45				X	X			
2- MIC -55			X		X			
1- MIC -65					X			

K1- LINE -10/+4
K2- MIC/LINE SELECT
K4- 2ND_STG-20
K5- /-20 (MIC XFMR BYPASS)
K6- MIC INP XFRMR BYPASS
K7- INSERT BYPASS
K8- O/P MUTE
K9- PHASE INVERT
K10- GR BYPASS
K13- 1ST STAGE BYPASS
K14- 1ST STG-10
K16- 2ND_STG-10
K17- 1ST_STG-20

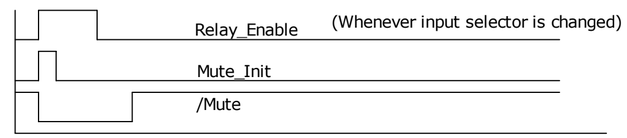

T-0

GREG HANKS DESIGN

TITLE: BA-66 Mic Pre/Limiter

DRAWN: GH	DATED: 10/1/94		
LAST REV GH	DATED: 4/11/2012	CODE:	SIZE:
QUALITY CONTROL:	DATED:	DRAWING NO: INP SEL & MUTE CTL	REV: 3.13
RELEASED: GH	DATED:	SCALE:	SHEET: 2 OF 12

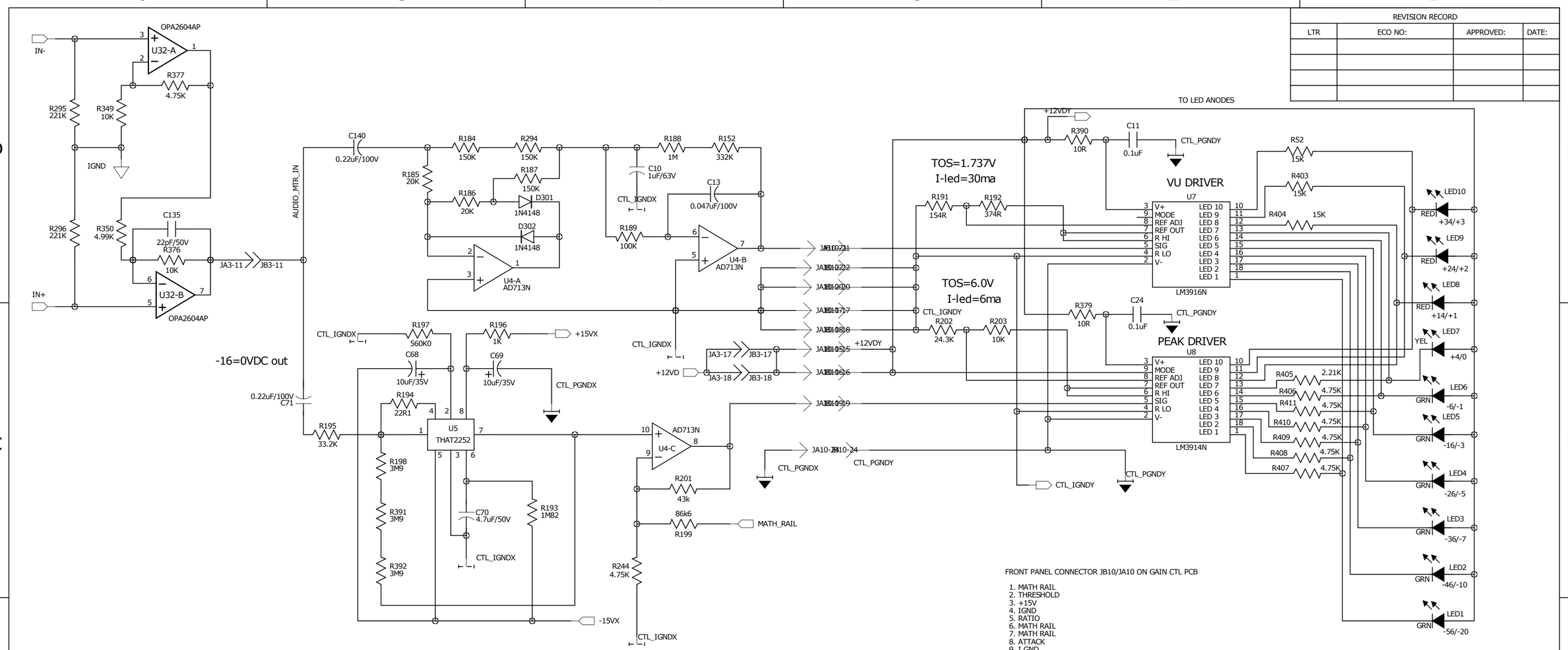

FRONT PANEL CONNECTOR JB10/JA10 ON GAIN CTL PCB

1. MATH RAIL
2. THRESHOLD
3. +15V
4. IGND
5. RATIO
6. MATH RAIL
7. MATH RAIL
8. ATTACK
9. I GND
10. I GND
11. RELEASE
12. MATH RAIL
13. +12vd
14. +12vd
15. +12vd
16. +12vd
17. I GND
18. I GND
19. PEAK MTR IN
20. P GND
21. VU MTR IN
22. P GND
23. PGND
24. PGND
25. PCB_SHLD
26. GAIN LVL +
27. GAIN LVL -
28. PCB_SHLD
29. GAIN CTL CLIP LVL +
30. GAIN CTL CLIP LVL -
31. PCB_SHLD
32. NC
33. GAIN CTL CLIP LED CATHODE
34. PCB_SHLD

REVISION RECORD			
LTR	ECO NO:	APPROVED:	DATE:

DRAWN: GH	DATED: 9/20/94	GREG HANKS DESIGN	
LAST REV GH	DATED: 7/24/96	TITLE: BA-660 Mic Pre/Limiter	
QUALITY CONTROL:	DATED:	CODE: / SIZE: / DRAWING NO: LEVEL METER	REV: 3.13
RELEASED: GH	DATED:	SCALE:	SHEET: 6 OF 12

REVISION RECORD			
LTR	ECO NO:	APPROVED:	DATE:

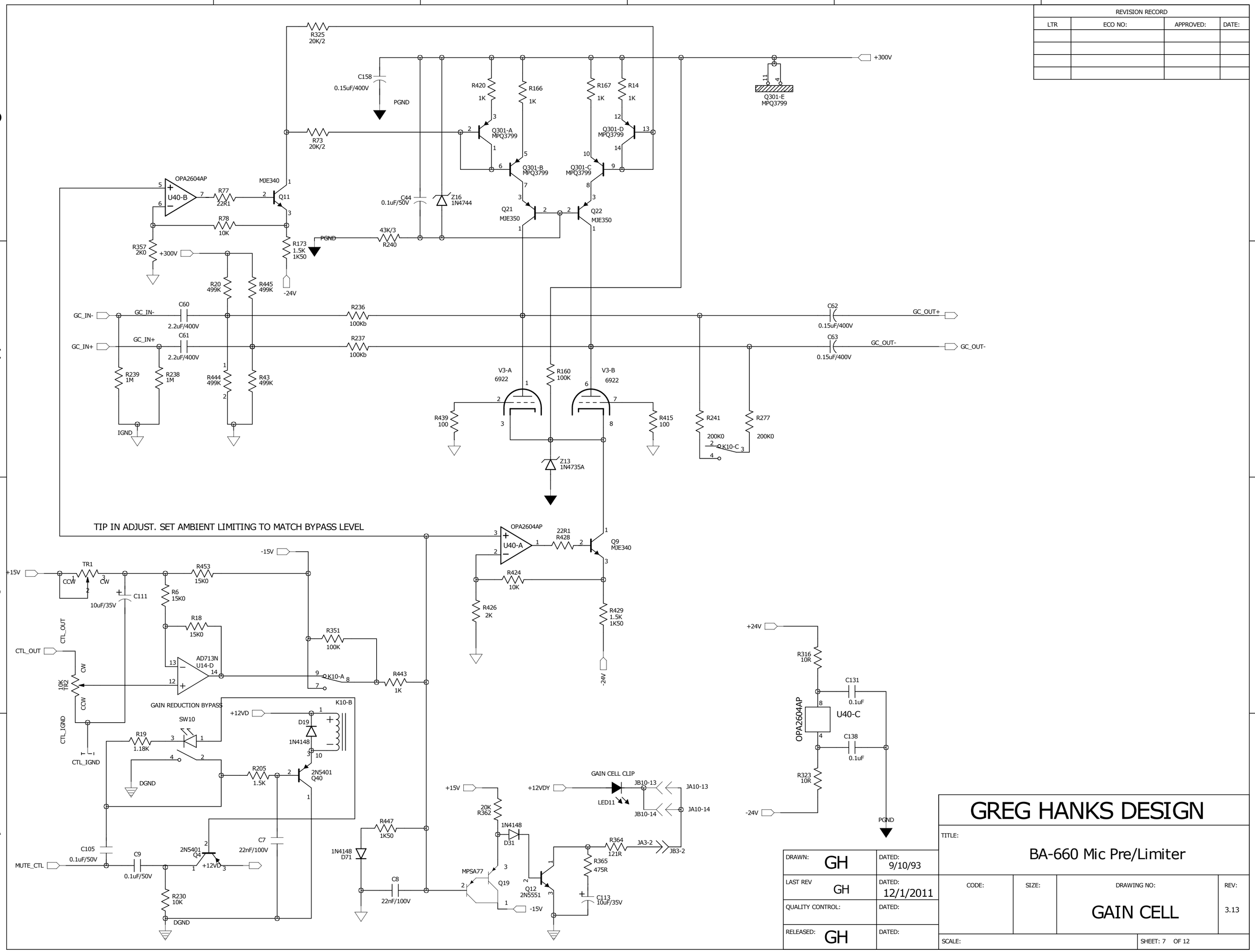

GREG HANKS DESIGN

TITLE: BA-660 Mic Pre/Limiter

DRAWN: GH	DATED: 9/10/93		
LAST REV GH	DATED: 12/1/2011		
QUALITY CONTROL:	DATED:		
RELEASED: GH	DATED:		

CODE:	SIZE:	DRAWING NO:	REV:
		GAIN CELL	3.13

SCALE: SHEET: 7 OF 12

REVISION RECORD			
LTR	ECO NO:	APPROVED:	DATE:

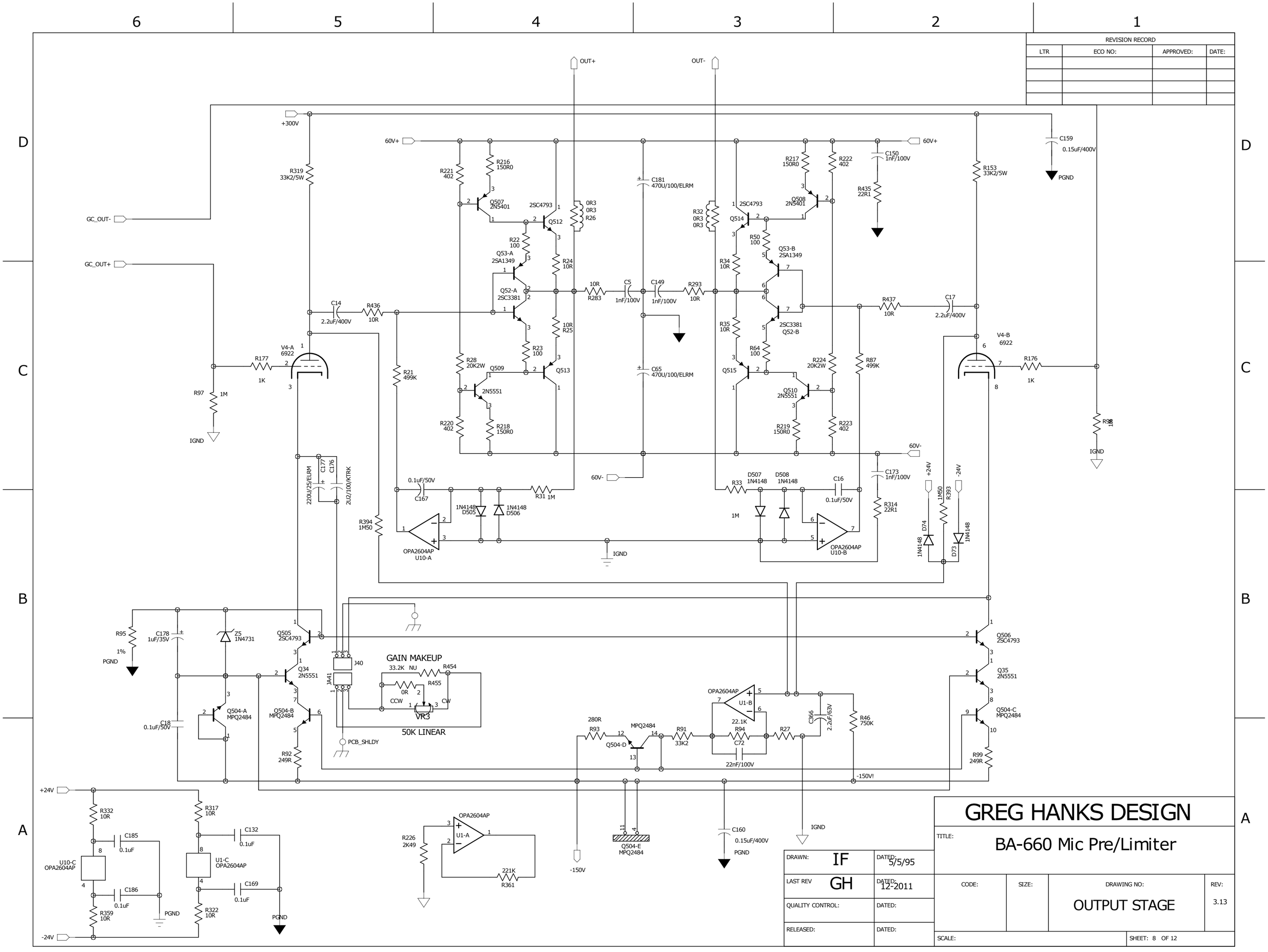

GREG HANKS DESIGN

TITLE: BA-660 Mic Pre/Limiter

DRAWN: IF	DATED: 5/5/95		
LAST REV GH	DATED: 12-2011		
QUALITY CONTROL:	DATED:		
RELEASED:	DATED:		

CODE:	SIZE:	DRAWING NO:	REV:
		OUTPUT STAGE	3.13
SCALE:		SHEET: 8 OF 12	

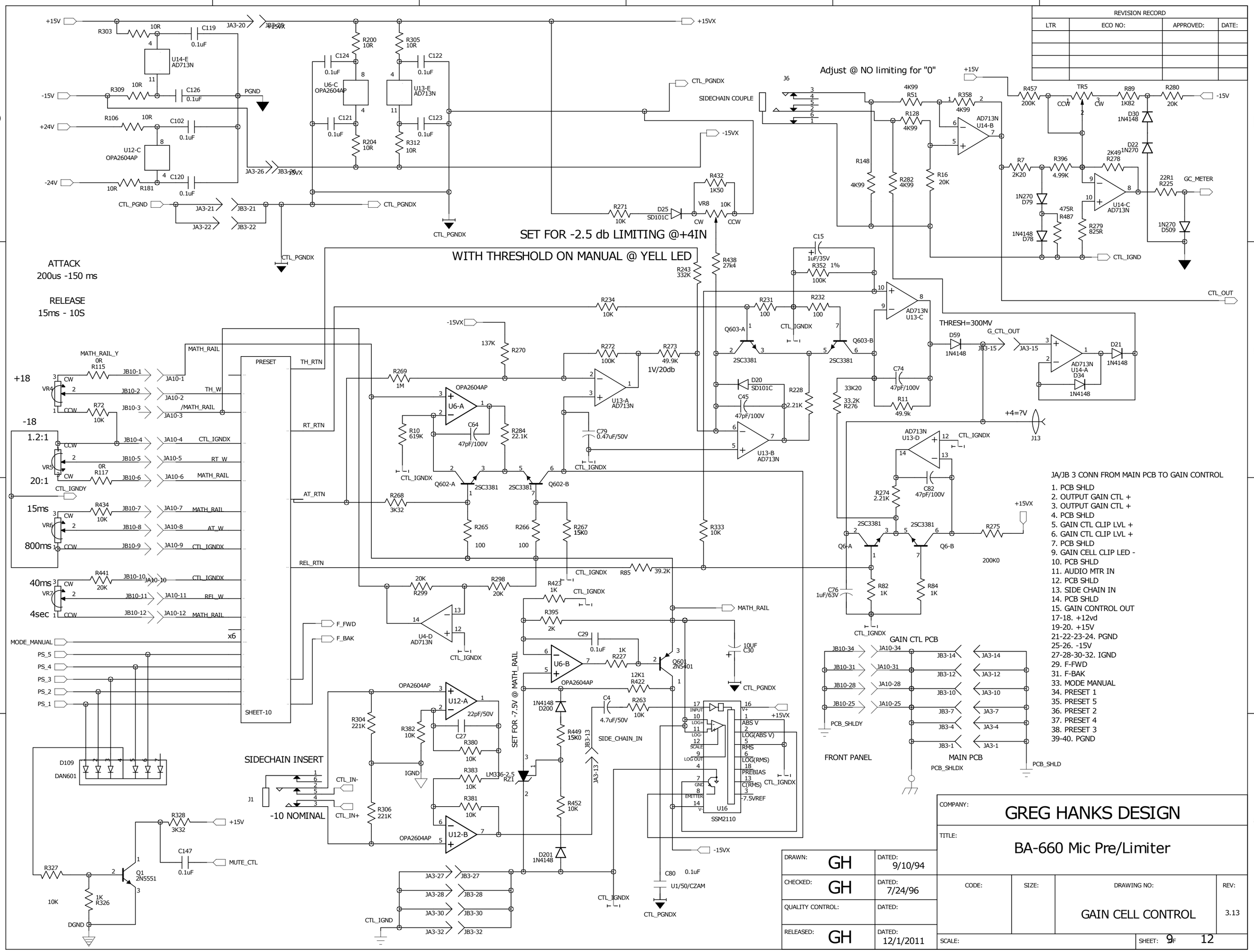
SET FOR -2.5 db LIMITING @+4IN
WITH THRESHOLD ON MANUAL @ YELL LED
Adjust @ NO limiting for "0"
ATTACK
200us -150 ms
RELEASE
15ms - 10S
THRESH=300MV
1V/20db
SIDECHAIN INSERT
-10 NOMINAL
SIDECHAIN COUPLE
SET FOR -7.5V @ MATH_RAIL
SIDE_CHAIN_IN
GAIN CTL PCB
FRONT PANEL
MAIN PCB
JA/JB 3 CONN FROM MAIN PCB TO GAIN CONTROL
1. PCB SHLD
2. OUTPUT GAIN CTL +
3. OUTPUT GAIN CTL +
4. PCB SHLD
5. GAIN CTL CLIP LVL +
6. GAIN CTL CLIP LVL +
7. PCB SHLD
9. GAIN CELL CLIP LED -
10. PCB SHLD
11. AUDIO MTR IN
12. PCB SHLD
13. SIDE CHAIN IN
14. PCB SHLD
15. GAIN CONTROL OUT
17-18. +12vd
19-20. +15V
21-22-23-24. PGND
25-26. -15V
27-28-30-32. IGND
29. F-FWD
31. F-BAK
33. MODE MANUAL
34. PRESET 1
35. PRESET 5
36. PRESET 2
37. PRESET 4
38. PRESET 3
39-40. PGND
REVISION RECORD
LTR
ECO NO:
APPROVED:
DATE:
COMPANY:
GREG HANKS DESIGN
TITLE:
BA-660 Mic Pre/Limiter
DRAWN: GH
DATED: 9/10/94
CHECKED: GH
DATED: 7/24/96
QUALITY CONTROL:
DATED:
RELEASED: GH
DATED: 12/1/2011
CODE:
SIZE:
DRAWING NO:
GAIN CELL CONTROL
REV:
3.13
SCALE:
SHEET: 9 OF 12

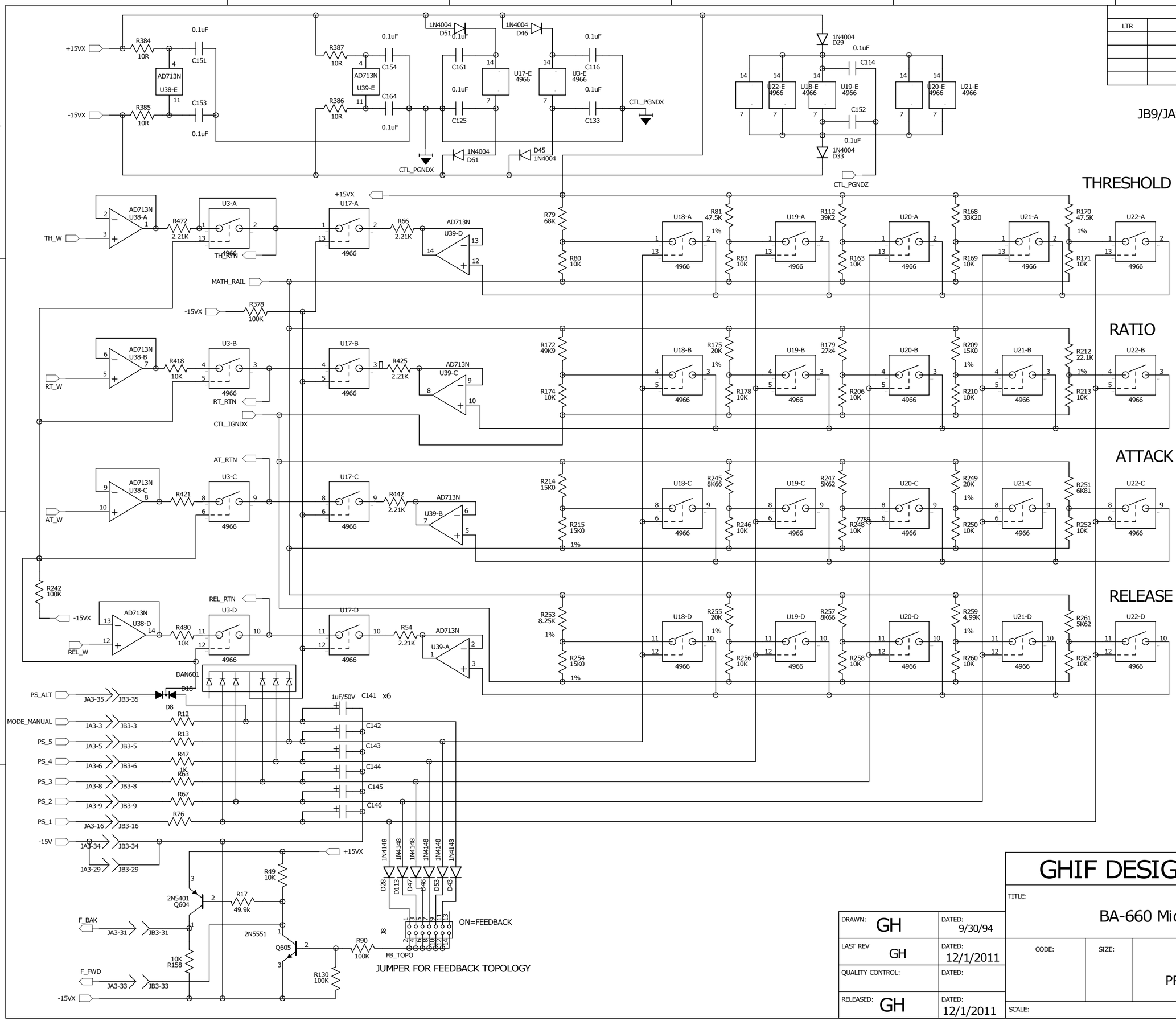

REVISION RECORD			
LTR	ECO NO:	APPROVED:	DATE:

GHIF DESIGN

TITLE: BA-660 Mic Pre/Limiter

DRAWN: GH	DATED: 9/30/94		
LAST REV GH	DATED: 12/1/2011		
QUALITY CONTROL:	DATED:		
RELEASED: GH	DATED: 12/1/2011		

CODE:	SIZE:	DRAWING NO:	REV:
		PRESET FLAVORS	3.13
SCALE:		SHEET: 10 OF 12	

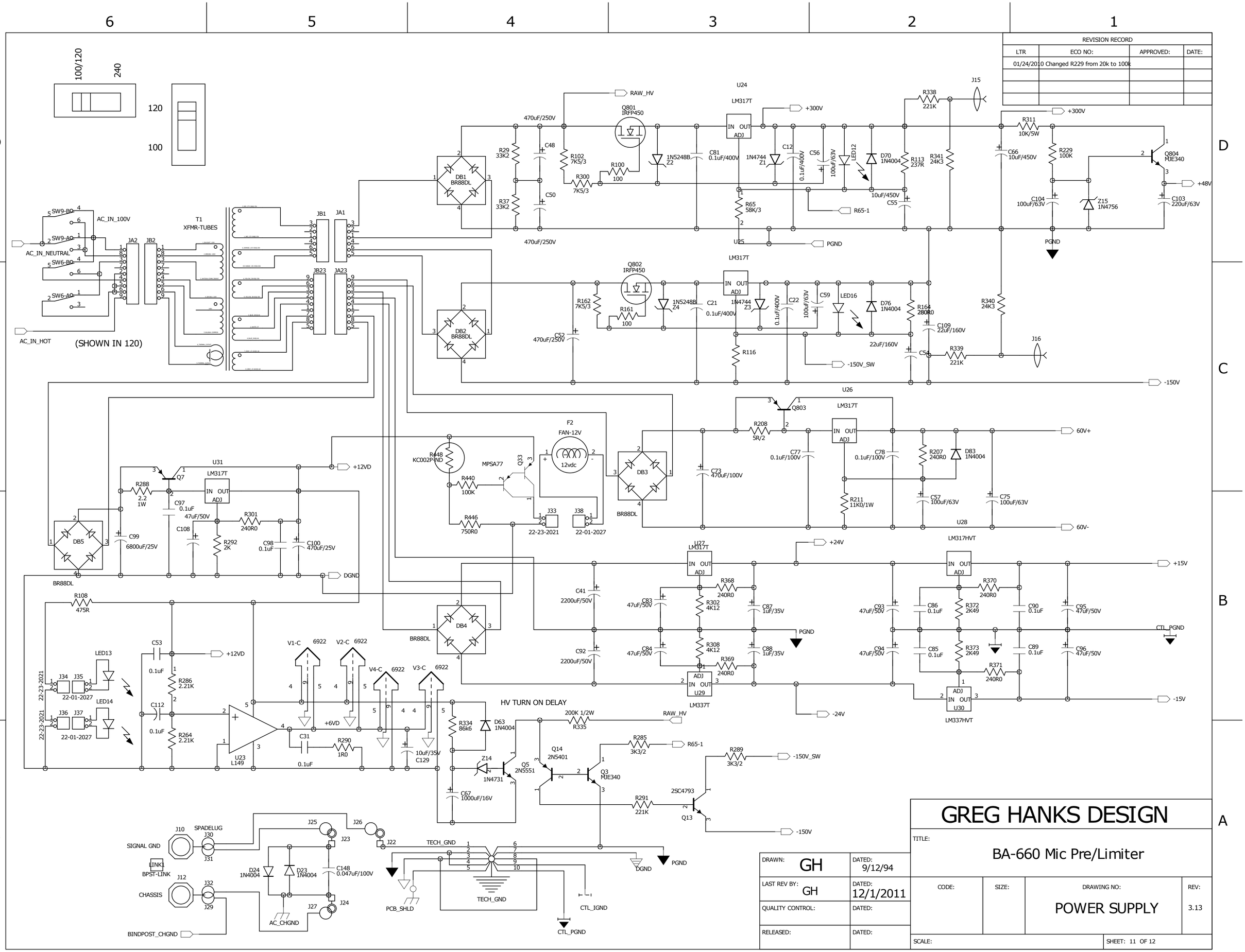

REVISION RECORD			
LTR	ECO NO:	APPROVED:	DATE:
01/24/2010 Changed R229 from 20k to 100k			

GREG HANKS DESIGN

TITLE: BA-660 Mic Pre/Limiter			
DRAWN: GH	DATED: 9/12/94		
LAST REV BY: GH	DATED: 12/1/2011	CODE:	SIZE:
QUALITY CONTROL:	DATED:	DRAWING NO: POWER SUPPLY	REV: 3.13
RELEASED:	DATED:	SCALE:	SHEET: 11 OF 12